Arcs & Sectors

www.Q8maths.com

10 The **perimeter** of each of the three shapes is 60 cm.

Find x in each part.

(a) Rectangle

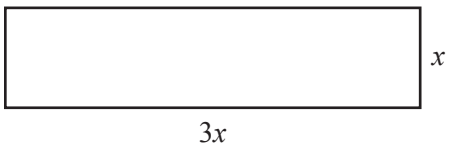

NOT TO SCALE

x = ... cm [2]

(b) Triangle

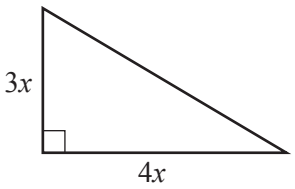

NOT TO SCALE

x = ... cm [3]

(c) Sector

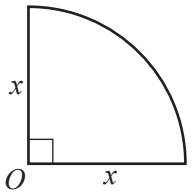

NOT TO SCALE

x = ... cm [3]

20 AB is an arc of a circle, centre O, radius 9 cm.
The length of the arc AB is 6π cm.
The area of the sector AOB is $k\pi$ cm^2.

Find the value of k.

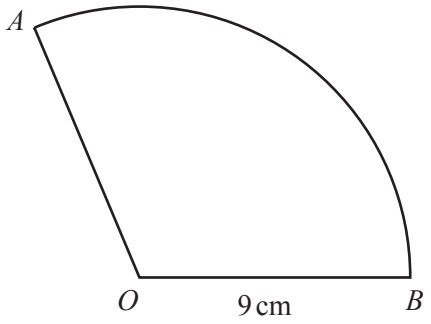

NOT TO SCALE

k = ... [3]

21 y is directly proportional to the positive square root of x.
When $x = 9$, $y = 12$.

Find y when $x = \frac{1}{4}$.

y = ... [3]

16

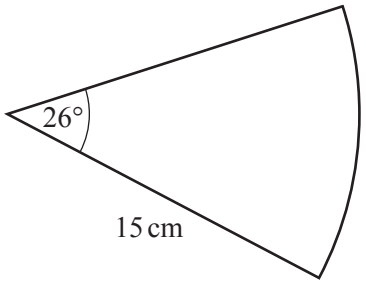

NOT TO SCALE

The diagram shows a sector of a circle with radius 15 cm.

Calculate the perimeter of this sector.

Answer ..... cm [3]

---

17 y is directly proportional to the square of $(x - 1)$.
$y = 63$ when $x = 4$.

Find the value of y when $x = 6$.

Answer $y =$ ..... [3]

---

18 A rectangle has length 5.8 cm and width 2.4 cm, both correct to 1 decimal place.

Calculate the lower bound and the upper bound of the perimeter of this rectangle.

Answer Lower bound ..... cm

Upper bound ..... cm [3]

14

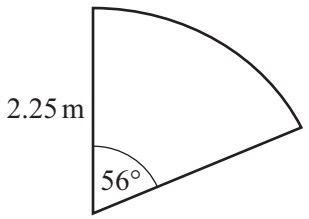

NOT TO SCALE

The diagram shows a sand pit in a child's play area.
The shape of the sand pit is a sector of a circle of radius 2.25 m and sector angle 56°.

(a) Calculate the area of the sand pit.

Answer(a) ..... m^2 [2]

(b) The sand pit is filled with sand to a depth of 0.3 m.

Calculate the volume of sand in the sand pit.

Answer(b) ..... m^3 [1]

---

15 **(a)** Write 90 as a product of prime factors.

Answer(a) ..... [2]

(b) Find the lowest common multiple of 90 and 105.

Answer(b) ..... [2]

7

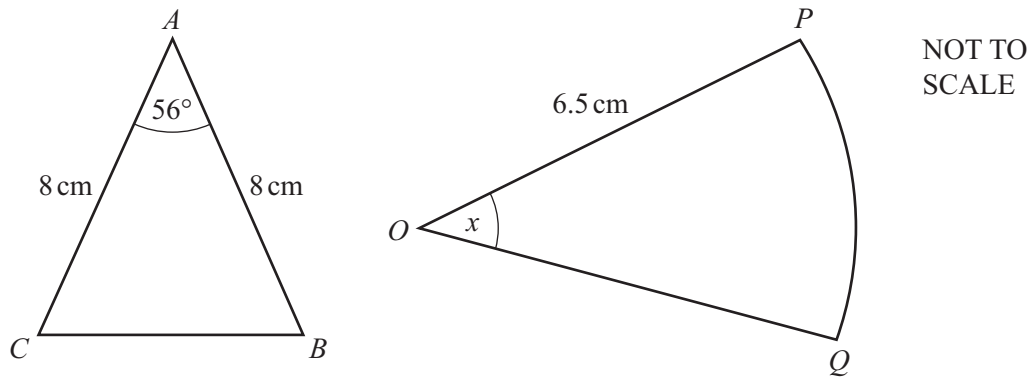

The diagram shows a triangle and a sector of a circle.
In triangle ABC, $AB = AC = 8$ cm and angle $BAC = 56°$.
Sector OPQ has centre O, sector angle x and radius 6.5 cm.

(a) Show that the area of triangle ABC is 26.5 cm^2 correct to 1 decimal place.

Answer(a)

[2]

(b) The area of sector OPQ is equal to the area of triangle ABC.

(i) Calculate the sector angle x.

Answer(b)(i) ..... [3]

(ii) Calculate the perimeter of the sector OPQ.

Answer(b)(ii) ..... cm [3]

(c) The diagram shows a sector of a circle, radius r cm.

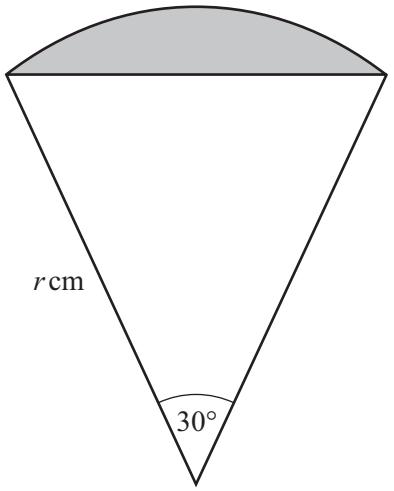

NOT TO SCALE

(i) Show that the area of the shaded segment is $\frac{1}{4}r^2\left(\frac{1}{3}\pi - 1\right)$ cm^2.

Answer(c)(i)

[4]

(ii) The area of the segment is 5 cm^2.

Find the value of r.

Answer(c)(ii) r = ... [3]

9

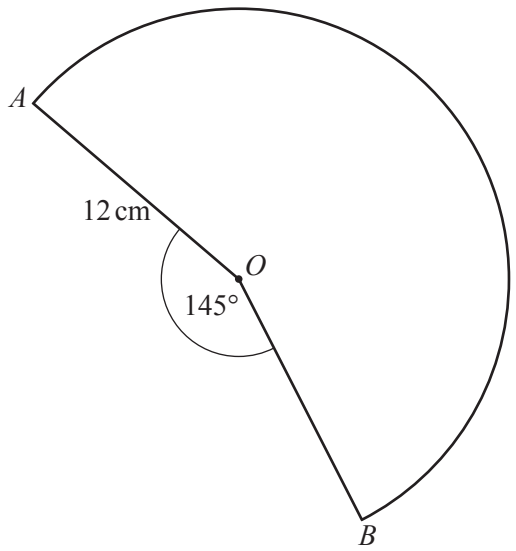

NOT TO SCALE

The diagram shows a sector, centre O, and radius 12 cm.

(a) Calculate the area of the sector.

..... cm^2 [3]

(b) The sector is made into a cone by joining OA to OB.

Calculate the volume of the cone.
[The volume, V, of a cone with base radius r and height h is $V = \frac{1}{3}\pi r^2 h$.]

..... cm^3 [6]

10 (a)

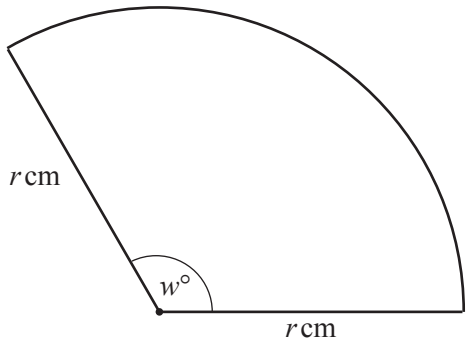

NOT TO SCALE

The area of this sector is r^2 square centimetres.

Find the value of w.

w = ... [3]

(b)

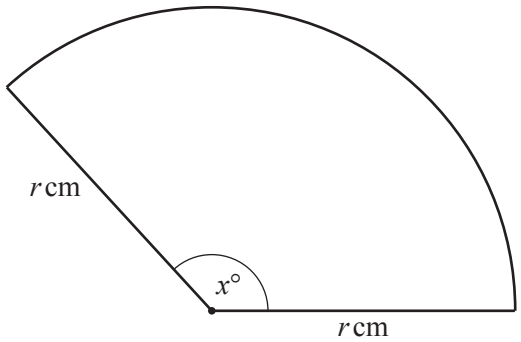

NOT TO SCALE

The perimeter of this sector is $2r + \frac{7\pi r}{10}$ centimetres.

Find the value of x.

x = ... [3]

17

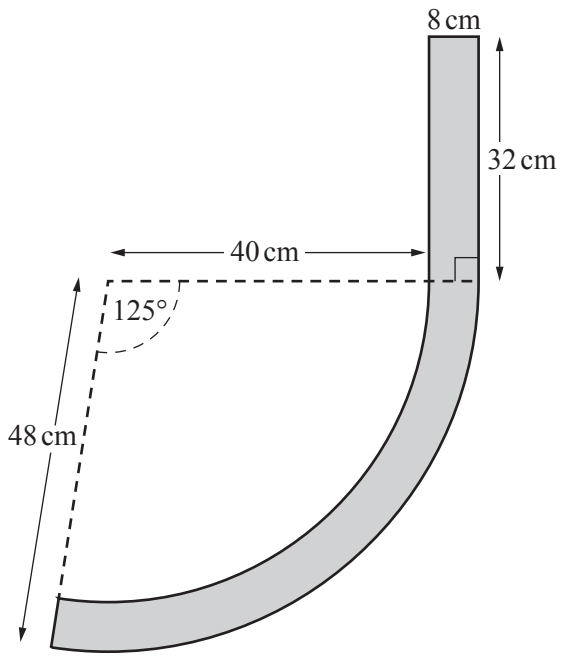

NOT TO SCALE

The diagram shows the cross section of part of a park bench.
It is made from a rectangle of length 32 cm and width 8 cm and a curved section.
The curved section is made from two concentric arcs with sector angle 125°.
The inner arc has radius 40 cm and the outer arc has radius 48 cm.

Calculate the area of the cross section correct to the nearest square centimetre.

..... cm^2 [5]

25

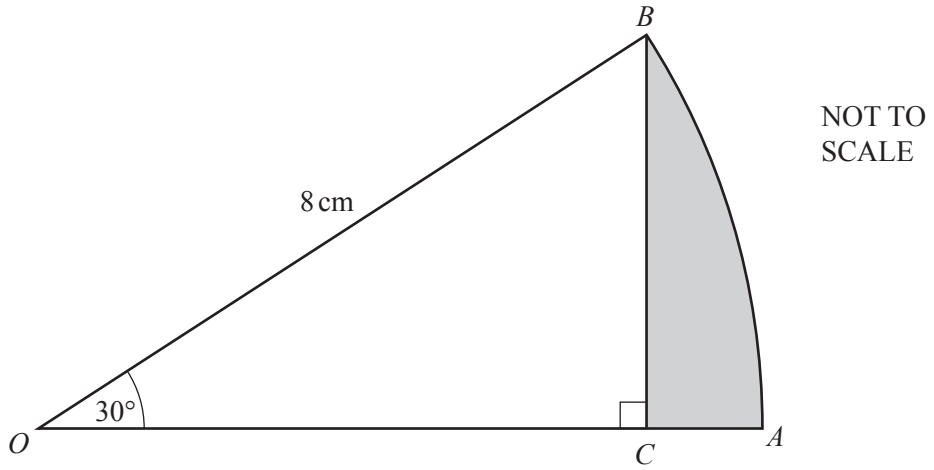

OAB is the sector of a circle, centre *O*, with radius 8 cm and sector angle 30°.
BC is perpendicular to *OA*.

Calculate the area of the region shaded on the diagram.

Answer ..... cm^2 [5]

Question 26 is printed on the next page.

19

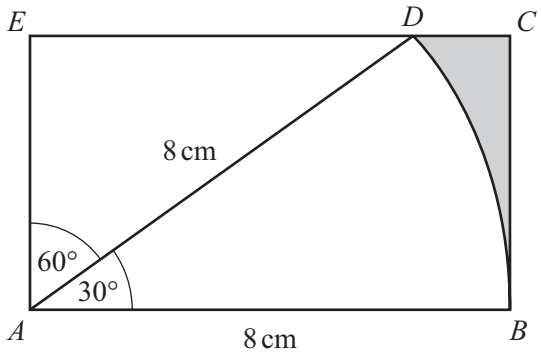

NOT TO SCALE

The diagram shows a rectangle *ABCE*.
D lies on *EC*.
DAB is a sector of a circle radius 8 cm and sector angle 30°.

Calculate the area of the shaded region.

Answer ..... cm^2 [7]

18

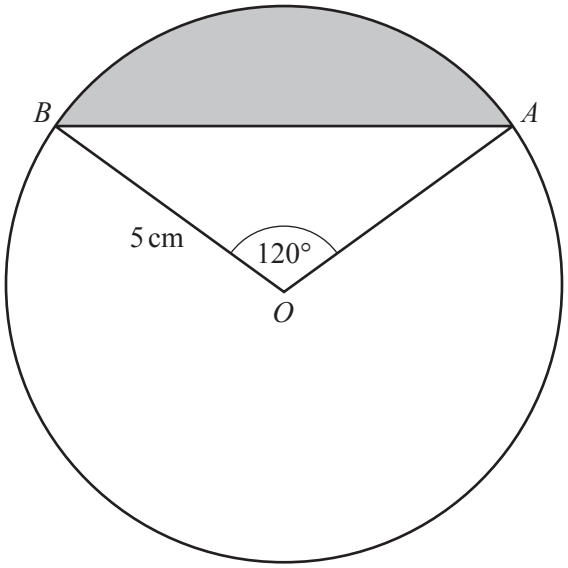

NOT TO SCALE

A and *B* lie on a circle centre *O*, radius 5 cm.
Angle *AOB* = 120°.

Find the area of the shaded segment.

Answer ..... cm^2 [4]

For Examiner's Use

19

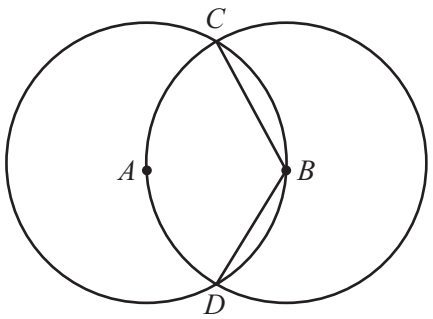

NOT TO SCALE

Two circles, centres A and B, are each of radius 8 cm and intersect at C and D.
Each circle passes through the centre of the other circle.

(a) Explain why angle CBD is 120°.

Answer(a)

[1]

(b) For the circle, centre B, find the area of the sector BCD.

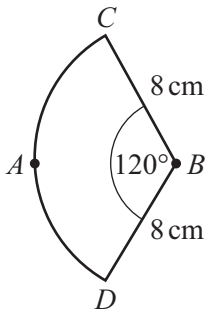

NOT TO SCALE

Answer(b) ..... cm^2 [2]

(c) **(i)** Find the area of the shaded segment CAD.

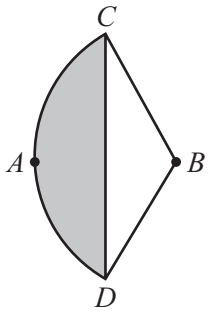

NOT TO SCALE

Answer(c)(i) ..... cm^2 [3]

(ii) Find the area of overlap of the two circles.

Answer(c)(ii) ..... cm^2 [1]

Question 20 is printed on the next page.

For Examiner's Use

16 The diagram shows the entrance to a tunnel.
The circular arc has a radius of 3 m and centre O.
AB is horizontal and angle $AOB = 120°$.

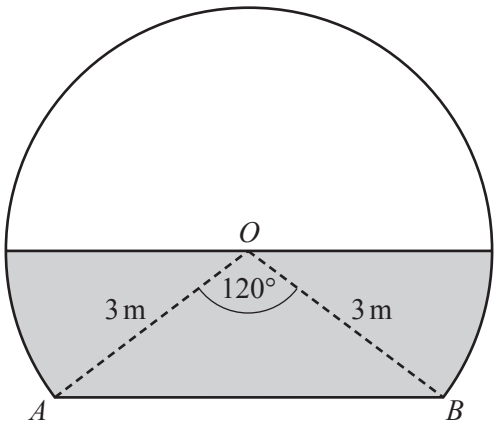

NOT TO SCALE

During a storm the tunnel filled with water, to the level shown by the shaded area in the diagram.

(a) Calculate the shaded area.

Answer(a) ..... m^2 [4]

(b) The tunnel is 50 m long.

Calculate the volume of water in the tunnel.

Answer(b) ..... m^3 [1]

8

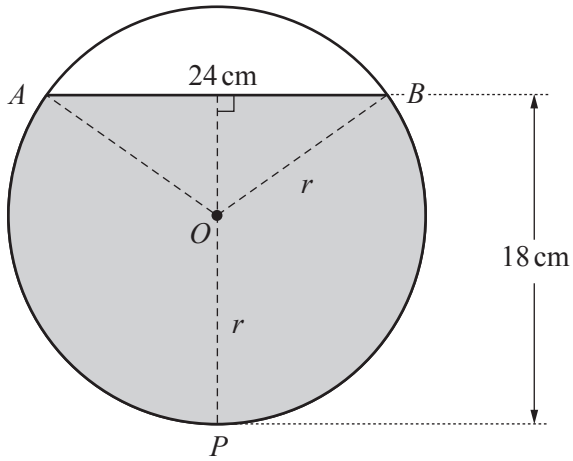

NOT TO SCALE

The diagram shows the cross section of a cylinder, centre O, radius r, lying on its side.
The cylinder contains water to a depth of 18 cm.
The width, AB, of the surface of the water is 24 cm.

(a) Use an algebraic method to show that $r = 13$ cm.

[4]

(b) Show that angle $AOB = 134.8°$, correct to 1 decimal place.

[2]

(c) **(i)** Calculate the area of the major sector $OAPB$.

.....cm^2 [3]

(ii) Calculate the area of the shaded segment *APB*.

.....cm^2 [3]

(iii) The length of the cylinder is 40 cm.

Calculate the volume of water in the cylinder.

.....cm^3 [1]

(d) The cylinder is turned so that it stands on one of its circular ends.
In this position, the depth of the water is *h*.

Find *h*.

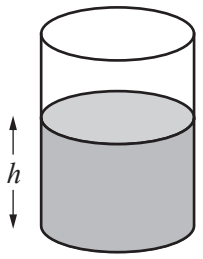

NOT TO SCALE

h = ... cm [2]

7

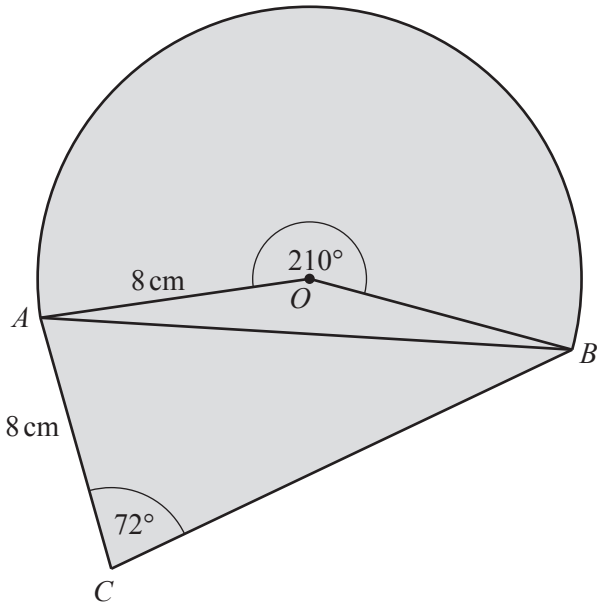

NOT TO SCALE

The diagram shows a design for a logo made from a sector and two triangles.
The sector, centre O, has radius 8 cm and sector angle 210°.
AC = 8 cm and angle ACB = 72°.

(a) Show that angle OAB = 15°.

[2]

(b) Calculate the length of the straight line AB.

AB = ... cm [4]

(c) Calculate angle *ABC*.

Angle *ABC* = ... [3]

(d) Calculate the total area of the logo design.

.....cm^2 [6]

(e) The logo design is an enlargement with scale factor 4 of the actual logo.

Calculate the area of the actual logo.

.....cm^2 [2]

19

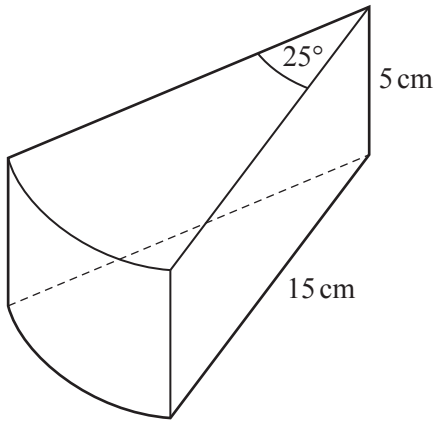

NOT TO SCALE

The diagram shows a wooden prism of height 5 cm.
The cross section of the prism is a sector of a circle with sector angle 25°.
The radius of the sector is 15 cm.

Calculate the **total** surface area of the prism.

Answer ..... cm^2 [5]

For Examiner's Use

4

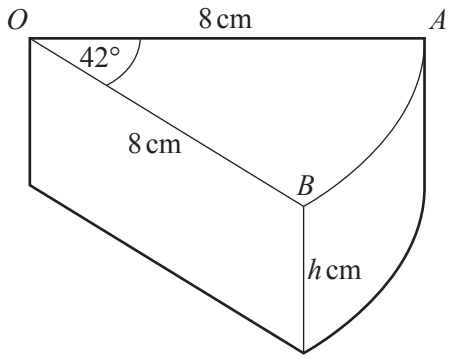

NOT TO SCALE

A wedge of cheese in the shape of a prism is cut from a cylinder of cheese of height h cm.
The radius of the cylinder, OA, is 8 cm and the angle $AOB = 42°$.

(a) **(i)** The volume of the wedge of cheese is 90 cm^3.

Show that the value of h is 3.84 cm correct to 2 decimal places.

Answer(a)(i)

[4]

(ii) Calculate the **total** surface area of the wedge of cheese.

Answer(a)(ii) ..... cm^2 [5]

(b) A mathematically similar wedge of cheese has a volume of 22.5 cm^3.

Calculate the height of this wedge.

Answer(b) ..... cm [3]